Concern Resolution Process for In-house Manufacturing

QC Story

QC STORY PROJECT

PROJECT TITLE :-
"To eliminate concern of Abnormal noise from RH 5th Body mount From Marazzo model"

Mahindra and Mahindra Ltd, Nasik Plant, Scorpio –Xylo TCF.

	Plan	Actual
Start Date	**01.06.19**	**30.06.19**
Completion Date	**20.01.20**	**20.01.20**

Current Status: **CLOSED**

Cross Functional Team

No	Description	Name	Designation	Dept	Phone
1	**Team Leader**	Niranjan Jadhav	L-7 0	STCF	8055709002
2	**Mentor**	Rahul Narkar	L-5 DH	STCF	9881080299
3	**Member 1**	Nitin Aher	L-6 M	STCF	9960800220
4	**Member 2**	Shrikant Vangala	L-8 O	R&D	7038695648
5	**Member 3**	Santosh Jadhav	L-7 O	MQA	9423309400
6	**Member 4**	Suryabhan Sor	L-7 O	STCF	9763003635
7	**Member 5**	Thakkar Darshak	L-7 O	SQA	7720074994

Step1. Select Subject

Brief Description :

- **What :** Abnormal noise from RH 5th Body mount.
- **Where:** At Squeak & rattle stage..
- **When:** Since June 2019
- **Who:** by stage associate.
- **Why:** Repeat FRC loss / FBO loss concern ,Rework is critical,
- **How:** Average 20 DPT / month , Daily 3-4 cases.

WHAT:	Abnormal noise from R5 body mount.
WHEN:	During vehicle running .
WHERE:	Reported from field and CAI.
HOW MANY:	INC – 6 No's
FAILUIRE KM :	@ PDI

OK condition of Body Insulator

NOT OK condition of Body Insulator

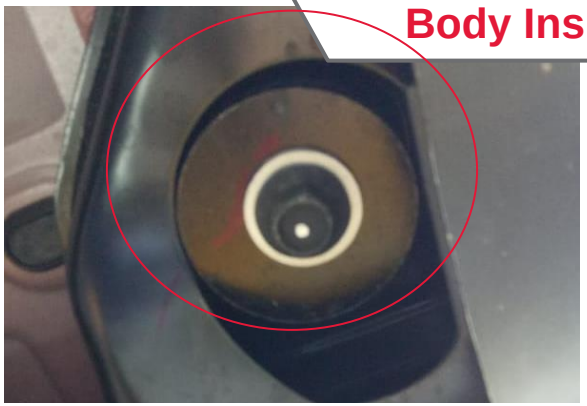

2. Justify the choice (reasons)

Crusade 2.0

Departmental Objective :-
BIQ – DPR Improvement
- FRC / FBO Improvement

2. Justify the choice

Pareto chart :-

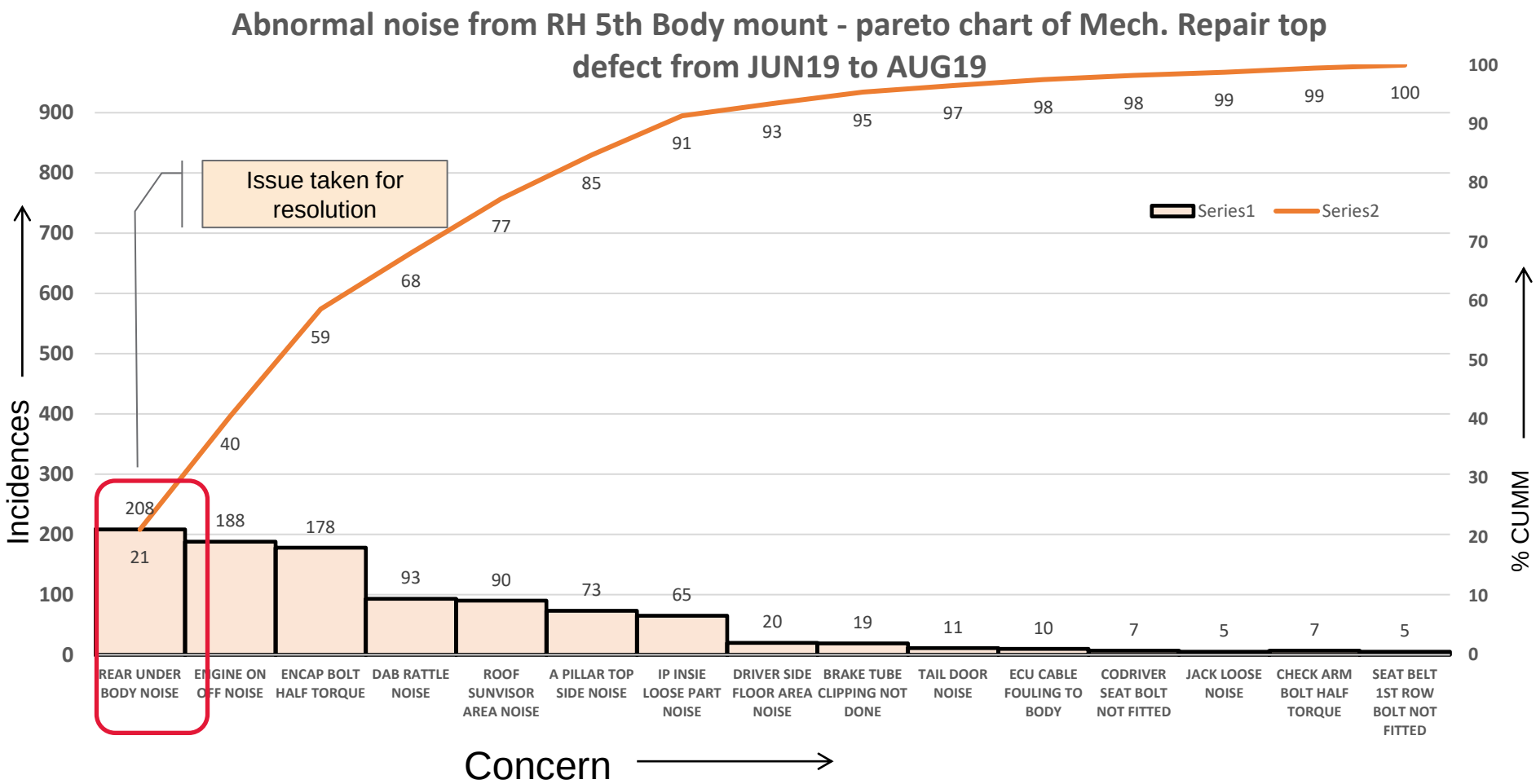

INFERENCE :-

Abnormal noise from Rh 5th body mount is top concern in TCF from JUN19 to Sep 19.

2. Justify the choice

Cost of Poor Quality

1. Rework cost for the defect is Rs. 26,709.
2. Vehicle have to recheck on rattle track for rework confirmation.
3. Rework includes edge grinding of the chassis bracket which leads detoriation of the paint quality of the chassis.

Rework Cost estimation		
Description	Units	
Rework time (Approx)	Min	10
Avg Concerns/Day	Nos	2.8
Total Required Rework time per day	Min	28
Effective working time	Min	465
Operator required /day	nos	0.06
Approx Operator cost/ day	Rs	1500
Operator cost /concern	Rs	89.03
Avg no. of working days	days	25
Operator cost /month	Rs	2225.8
Operator Cost/year	**Rs**	**26709.7**

Total Cost/ year = Rs. 26709.7 /-

2.b Immediate Containment Action

Immediate containment action:-

1. DRF to stage operator and buy off check man to detect defect.

3.Awareness given to stage associates for rework of underbody noise issue.

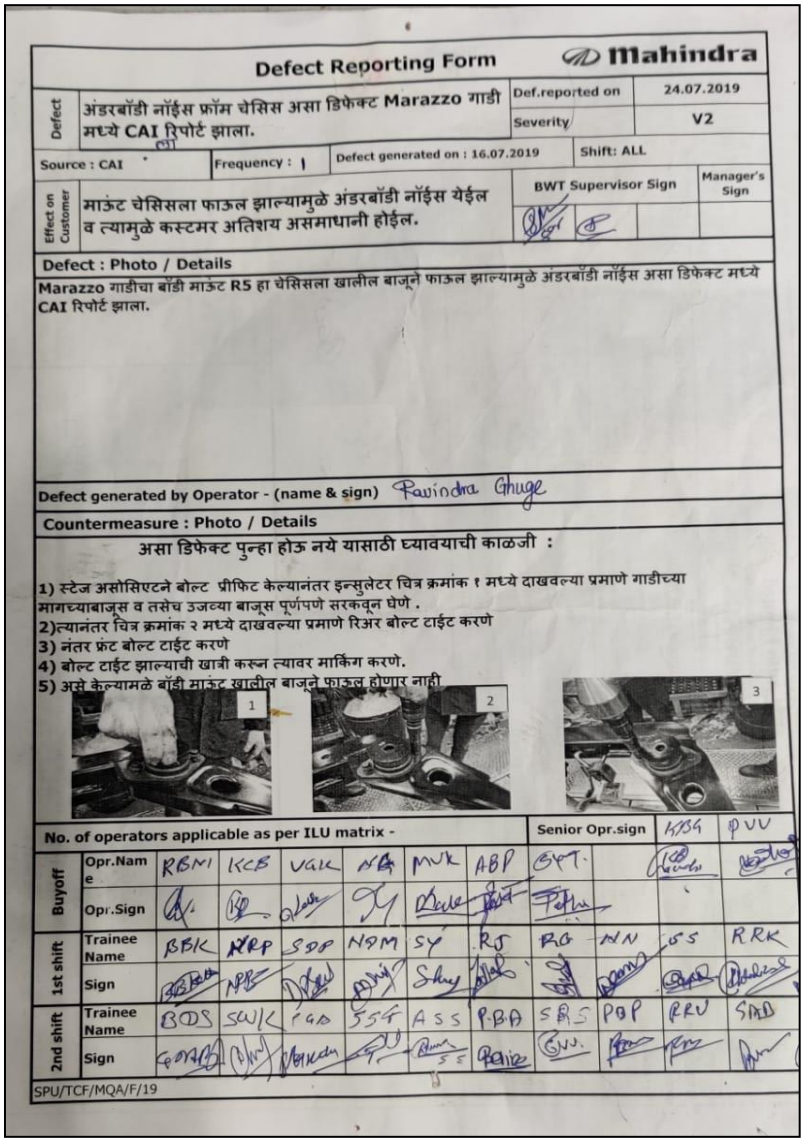

Defect Reporting Form — Mahindra

Defect	अंडरबॉडी नॉईस फ्रॉम चेसिस असा डिफेक्ट Marazzo गाडी मध्ये CAI रिपोर्ट झाला.	Def.reported on	24.07.2019
		Severity	V2

Source : CAI | Frequency : 1 | Defect generated on : 16.07.2019 | Shift: ALL

		BWT Supervisor Sign	Manager's Sign
Effect on Customer	माऊंट चेसिसला फाऊल झाल्यामुळे अंडरबॉडी नॉईस येईल व त्यामुळे कस्टमर अतिशय असमाधानी होईल.		

Defect : Photo / Details

Marazzo गाडीचा बॉडी माऊंट R5 हा चेसिसला खालील बाजूने फाऊल झाल्यामुळे अंडरबॉडी नॉईस असा डिफेक्ट मध्ये CAI रिपोर्ट झाला.

Defect generated by Operator - (name & sign) Ravindra Ghuge

Countermeasure : Photo / Details

असा डिफेक्ट पुन्हा होऊ नये यासाठी घ्यावयाची काळजी :

1) स्टेज असोसिएटने बोल्ट प्रीफिट केल्यानंतर इन्सुलेटर चित्र क्रमांक १ मध्ये दाखवल्या प्रमाणे गाडीच्या मागच्याबाजूस व तसेच उजव्या बाजूस पूर्णपणे सरकवून घेणे .
2)त्यानंतर चित्र क्रमांक २ मध्ये दाखवल्या प्रमाणे रिअर बोल्ट टाईट करणे
3) नंतर फ्रंट बोल्ट टाईट करणे
4) बोल्ट टाईट झाल्याची खात्री करून त्यावर मार्किंग करणे.
5) असे केल्यामळे बॉडी माऊंट खालील बाजूने फाऊल होणार नाही

1 2 3

No. of operators applicable as per ILU matrix -									Senior Opr.sign		
Buyoff	Opr.Name	RBM	KCB	VAK	NA	MVK	ABP	GPT			
	Opr.Sign										
1st shift	Trainee Name	BBK	NRP	SDP	NPM	SY	RJ	RG	NN	GS	RRK
	Sign										
2nd shift	Trainee Name	BDS	SWK	PGD	SSG	ASS	PBA	SRS	PGP	RRV	SPD
	Sign										

SPU/TCF/MQA/F/19

Step 3. Understanding Current Situation

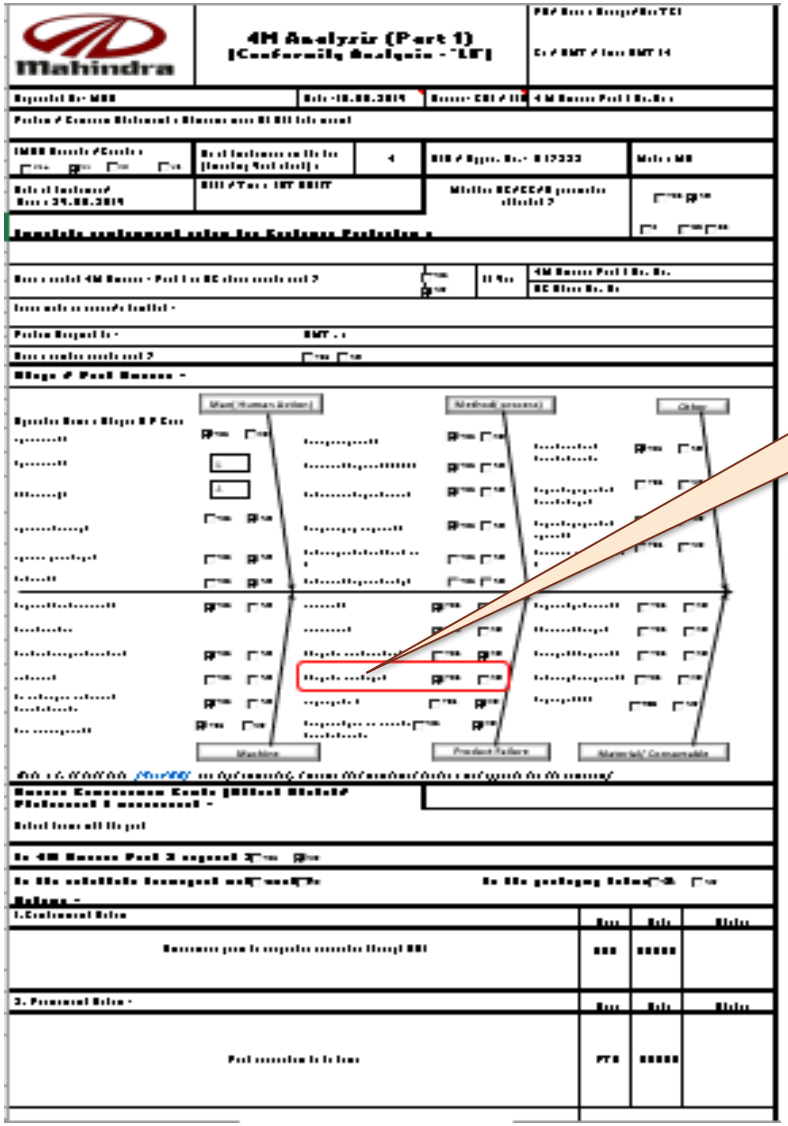

Inference from L0,
Problem follows part & vehicle
Problem is a repeat problem & hence detailed analysis required

4M analysis Good and Not so good observations	
MAN	Operator Dext. Level L4
Method	Operator aware of key point and check present at buyoff
Others	Control plan adhered on stage
Machine	Tools used are calibrated
Product failure	**Problem follows part**
Material	Handling and shelf life of part adhered

Step 3. Understanding Current Situation

Observation of process:-

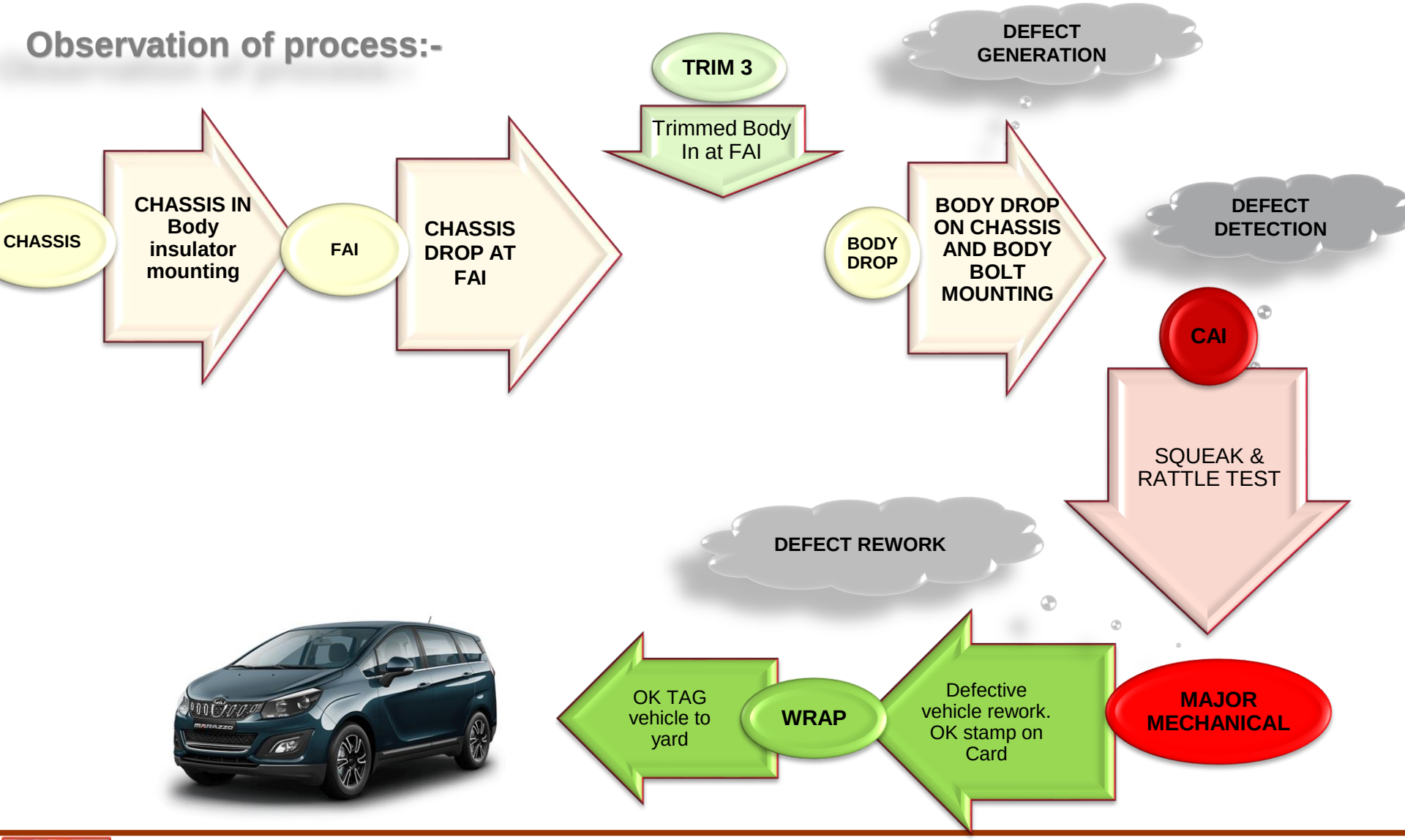

3. Understand the current situation

Monthly defect trend

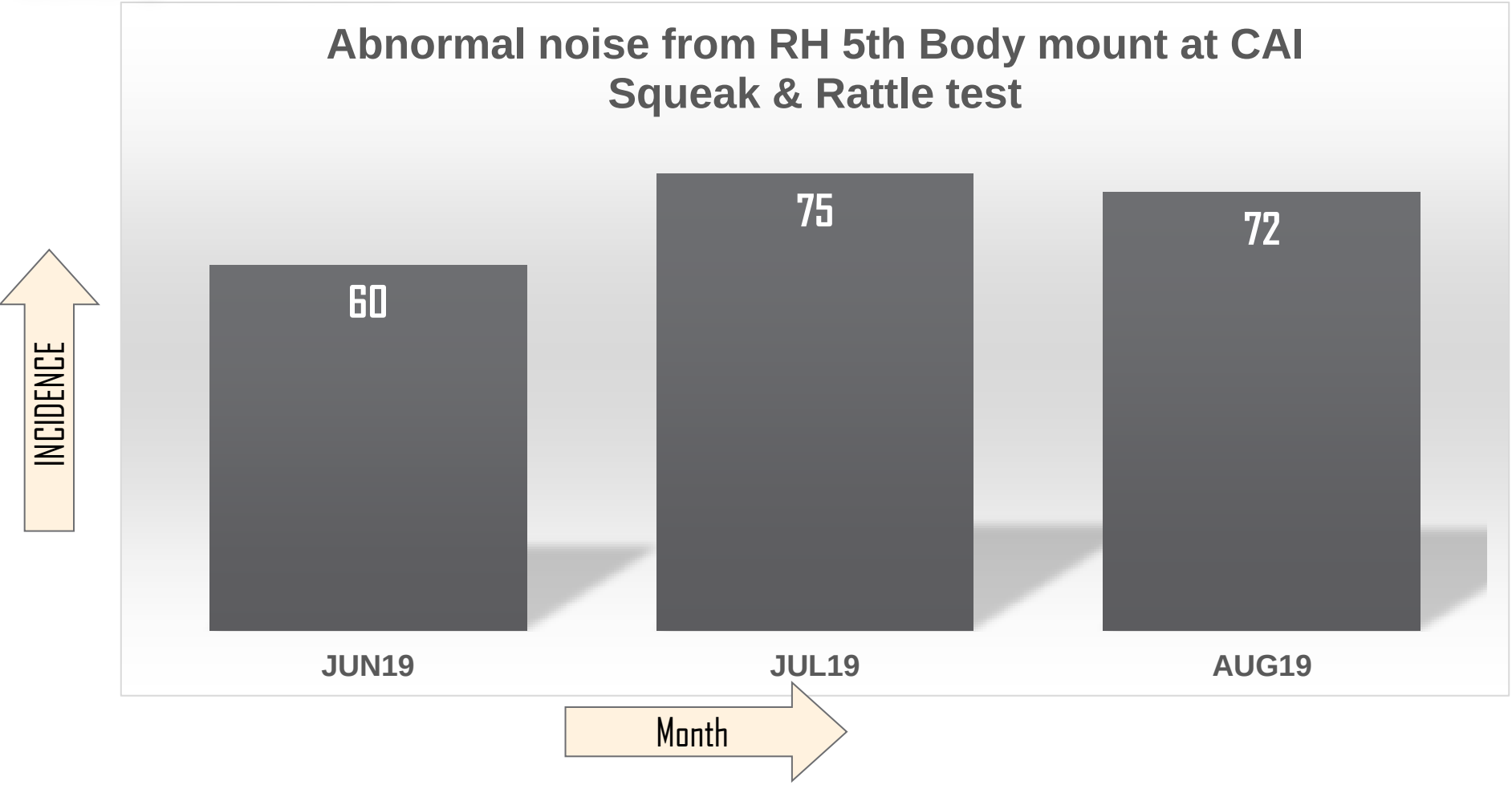

INFERANCE:- **Defect incidences are consistent and increasing.**

Step 3. Understanding Current Situation

Good & Not so good observations

- Issue observed only in Marazzo Model.
- Issue reported in both the shifts
- Repair process is tricky .
- Issue reported at stage.
- Not all the vehicles having this issue.
- Chassis outrigger bracket & body bolt insulator needs to grind.
- Part getting rejected while rework of defect.
- Not sure about 100% ok condition after rework

4. Select targets

Identify the target. A target is a number indicating the level of improvement to be achieved.

Present Level:	69 Average monthly incidences
Target :	**Concern elimination by DEC 2019**

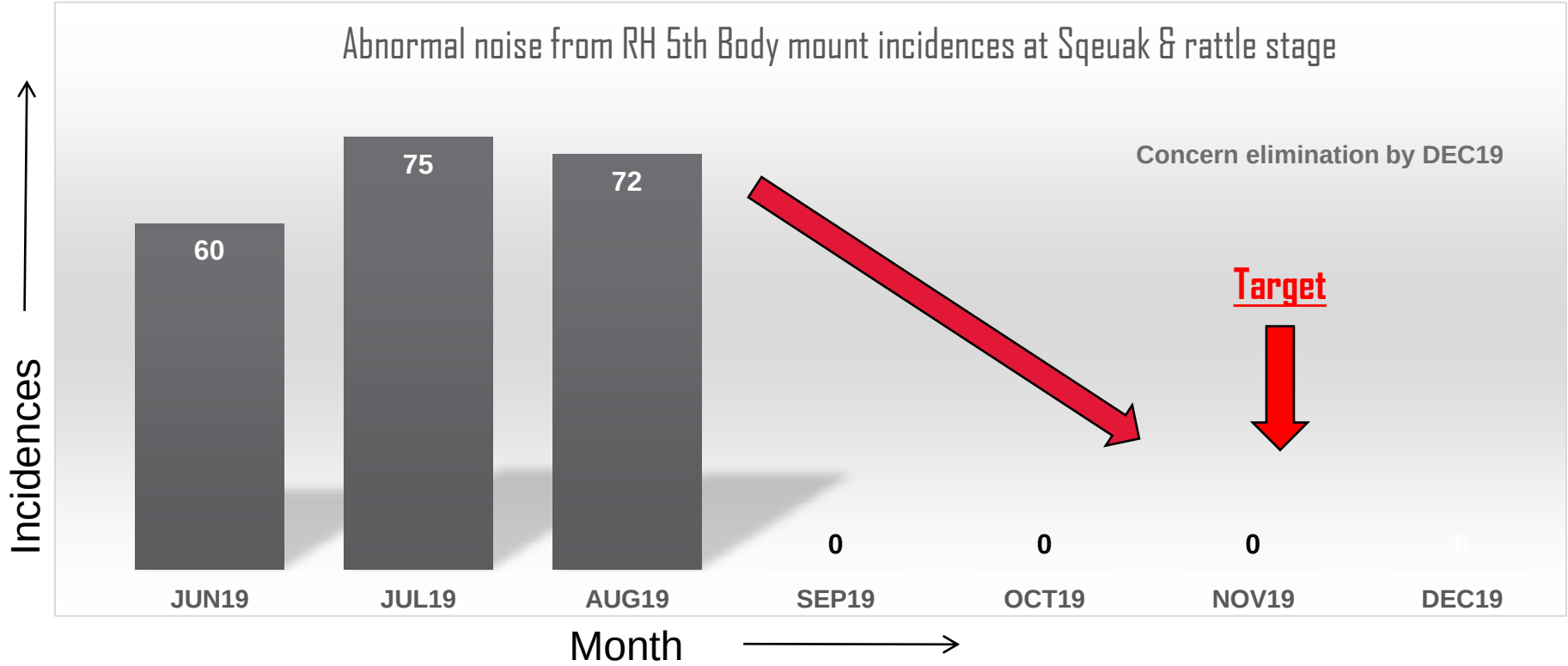

INFERANCE:- **Target taken for rear under body noise concern to eliminate by DEC 2019.**

Step 5. Analysis

List of Probable causes identification in Brain storming session

The possible causes who are having the Total score above 35 or more are considered as the probable causes. In Total of 12 Possible causes 5 Probable causes are identified.

5. Analysis

List of 12 Possible causes after brainstorming among team members

Sr. no.	Possible cause	Sr. no.	Possible cause
1	New operator deployed at stage.	6	Insulator mounting shifted on chassis.
2	SOS Not Followed.	7	Chassis outrigger damaged.
3	Unskilled operator for insulator assembly.	8	Outrigger bracket and bottom insulator gap not ok.
4	Chassis top hole dimensions not ok.	9	Body cage nut shifted on body.
5	Body bolt gun torque not ok.	10	Insulator washer dimensions not ok.

Step 5. Analysis

List Of Possible Causes

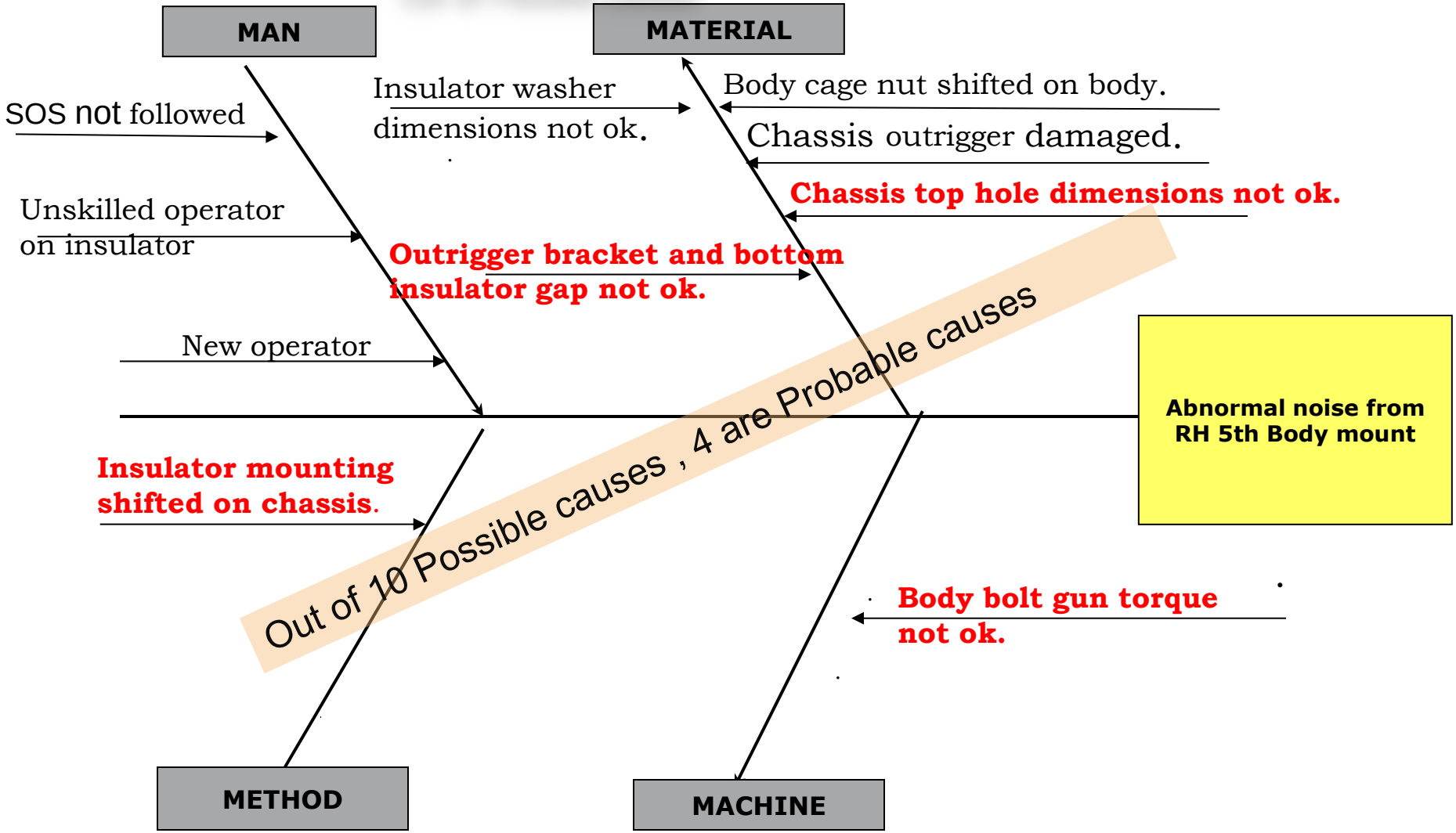

Step 5. Analysis

List of Probable causes identification in Brain storming session

Sr. no	Possible Causes	Santosh	Niranjan	Surya	Nilesh	Shrikant	Darshak	Satish	Total
1	New operator deployed at stage.	1	1	3	3	3	3	3	17
2	SOS Not Followed .	1	1	1	1	1	1	1	7
3	Unskilled operator for insulator assembly.	3	3	3	3	1	3	3	19
4	Chassis top hole dimensions not ok.	9	9	9	3	3	3	3	39
5	Body bolt gun torque not ok.	9	9	9	9	1	1	1	39
6	Insulator washer dimensions not ok.	1	3	1	3	3	1	3	15
7	Chassis outrigger damaged.	1	1	3	9	1	3	3	21
8	Outrigger bracket and bottom insulator gap not ok.	9	9	3	3	9	9	3	45
9	Body cage nut shifted on body	3	3	3	3	3	3	3	21
10	Insulator mounting shifted on chassis.	9	3	1	3	9	9	9	43

Selection Criteria: 0-No impact, 1- less impact , 3-High impact , 9- Significant impact.
Threshold Value for selecting probable cause is 39.

Step 5. Analysis

List of causes not considered as probable causes and reasons for not considering

Sr. No.	Not considered Causes	Reasons
1	New operator deployed at stage.	All trained operator deployed on stage
2	SOS Not Followed .	SOS Followed
3	Unskilled operator for insulator assembly	All trained operator deployed on stage
6	Insulator washer dimensions not ok	Dimensions checked found ok
7	Chassis outrigger damaged.	Gun RPM checked found ok
9	Body cage nut shifted on body	Visually checked confirmed OK.

5.1 Identify Probable cause

No	List of Probable Causes
4	Chassis top hole dimensions not ok.
5	Body bolt gun torque not ok.
8	Outrigger bracket and bottom insulator gap not ok.
10	Insulator mounting shifted on chassis.

TEST OF HYPOTHESIS

5.2 Confirm the probable cause:

No	Probable Cause	Testing method	Testing and Observations	Conclusion
4	Chassis top hole dimensions not ok.	L1 analysis report	Chassis top hole dimensions checked – total 5 no's chassis checked found ok.	**INVALID**

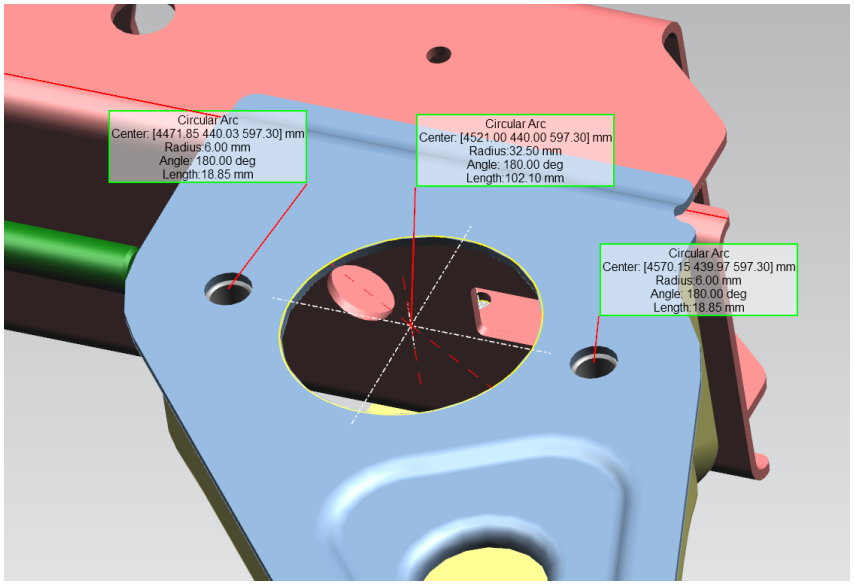

Sr. No.	Shear insulator hole	Mounting Hole no. 1	Mounting Hole no. 2
1	32.51 mm	6.15 mm	6.09 mm
2	32.65 mm	6.05 mm	6.12 mm
3	32.58 mm	6.03 mm	6.08 mm
4	32.54 mm	6.13 mm	6.05 mm
5	32.60 mm	6.07 mm	6.02 mm

Conclusion:- Chassis top hole dimensions found within specification.

TEST OF HYPOTHESIS

5.2 Confirm the probable cause:

No	Probable Cause	Testing method	Testing and Observations	Conclusion
5	Body bolt gun torque not ok.	Torque study	Body bolt torqueing checked – found ok. Vehicle residual torque checked - Found ok	**INVALID**

Dynamic Torque checked –
Specification – 70 ± 5 Nm
Observed – 70.7 ,71.0,70.6 Nm
Cp – 8.85 , Cpk – 7.48

PIPC of CC & SC Characteristics - MARAZZO- F-20												
				Torque (Nm)			Control Limits			Measurements		
Sr No	stage	Operation Description	Tool No.	Nominal	LSL	USL	LCL	UCL	Cp	Cpk	PIPC %	
87	Chassis	Body mtg insulater on chassis R-2,5	ELEC	70±5	65	75	71.36	70.24	8.85	7.48	100%	

Residual Torque checked –
Specification – 70 (58 – 90Nm)
Observed – 73.10,69.3 , 72.4 , 75.2, 73.2, 76.6

			Torque (Nm)			Control Limits			Measurements								
Sr No	stage	Operation Description	Nominal	LSL	USL	LCL	UCL	What	1	2	3	4	5	X bar	Range	Tool No.	Sum
87	Chassis	Body mtg insulater on chassis R-2,5	70±5	65	75	71.36	70.24	JA	70.6	71.00	70.7			70.77	0.40	ELEC	212.3

<u>Conclusion</u> :- Both dynamic and residual torque found OK as per specification.

TEST OF HYPOTHESIS

5.2 Confirm the probable cause:

No	Probable Cause	Testing method	Testing and Observations	Conclusion
8	Outrigger bracket and bottom insulator gap not ok.	Design and standard study	CAD study done to check critical gap between outrigger and insulator. As per CAD study only 1.5 mm critical gap available between Outrigger and Insulator. So whenever Chassis trim edge going one side of tolerance fouling observed.	**VALID**

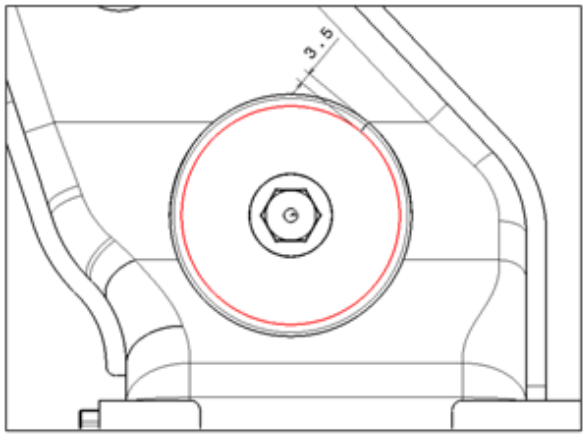

Outrigger at exact center position

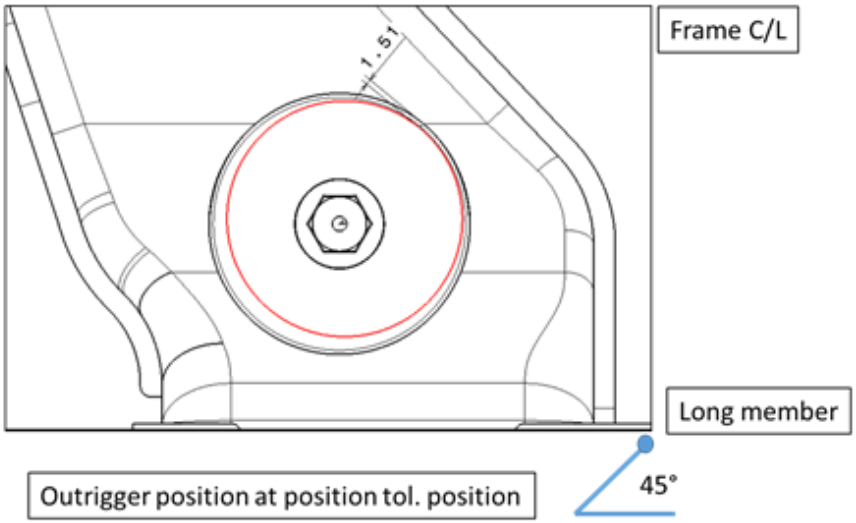

Outrigger position at position tol. position

1. With this position tolerance gap between outrigger washer and cross member is 1.51mm
2. If we consider profile tolerance(6mm) of cross member punching body mount washer will foul with cross member.

Conclusion :- Design is not adequate to compensate – this is valid cause

TEST OF HYPOTHESIS

5.2 Confirm the probable cause:

No	Probable Cause	Testing method	Testing and Observations	Conclusion
10	Insulator mounting shifted on chassis.	Visual observation	10 cycles of insulator mounting checked on chassis line. There is chances to get variation while insulator assembly . Insulator moves towards out trigger edge while achieving torque.	**VALID**

Top view of insulator

Bottom view of insulator

Variation in gap with remove refit

<u>Conclusion</u> :- Variation observed in out trigger to chassis edge with same parts so this is valid cause.

TEST OF HYPOTHESIS

5.2 Confirm the probable cause:

No	Probable Cause	Testing method	Conclusion
08	Outrigger bracket and bottom insulator gap not ok.	Design and standard study	**Hypothesis valid**
10	Insulator mounting shifted on chassis.	Visual observation	**Hypothesis valid**

2 Valid Cause

WHY - WHY Analysis

5.3 Identify the root causes:

No	Valid Probable Cause	WHY	WHY	WHY	ACTION / COUNTERMEASURE
08	Outrigger bracket and bottom insulator gap not ok.	Gap observed between outrigger and insulator is seems very critical in CAD.	Considering all stack up part observed digging inside chassis bracket.	In CAD - gap between insulator and outrigger observed only 1.5 mm without considering part tolerancing.	Design chassis outrigger bracket such that it will not foul to outrigger after applying all tolerances.
10	Insulator mounting shifted on chassis.	Insulator and outrigger mounting having too much clearance – which allows part rotation while assembly	No control while part fitment to restrict part movement while torqueing	Tightening process inadequate	Derive control in tightening process to avoid positive movement of part towards chassis outrigger bracket edge.

6. Implement the corrective measures

Possible Remedies Identified

One possible solutions identified for Abnormal noise from underbody from R5 body mount.

Legends

High ↑ Low ↓

S N	Root Cause	Remedy Developed	Time to implement	Cost of Improvement	Easily reversible	Complexity	Decision
08	In CAD - gap between insulator and outrigger observed only 1.5 mm without considering part tolerancing.	Design chassis outrigger bracket such that it will not foul to outrigger after applying all tolerances.	High ↑	High ↑	High ↑	Low ↓	**Yes**
10	Tightening process inadequate	Derive control in tightening process to avoid positive movement of part towards chassis outrigger bracket edge.	Low ↓	Low ↓	Low ↓	Low ↓	**Yes**

6. Implement the corrective measures

6.1 Actions Decided

No	Root Cause	Action plan	Actual date	Responsibility	Status
08	Outrigger bracket and bottom insulator gap not ok.	Design chassis outrigger bracket such that it will not foul to outrigger after applying all tolerances – **Chassis outrigger bracket design modified and gap increased.**	26.09.2019	Shrikanth Vangala	Implemented.

OBSERVATIONS AND ACTIONS :-

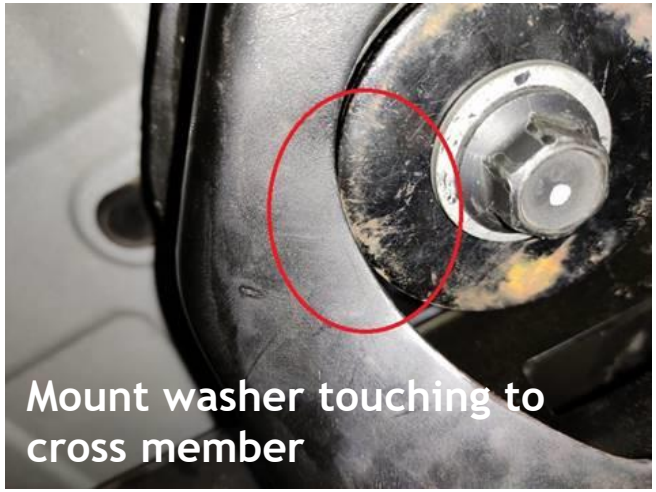

Proposal :-

ICA :- Cross member –Bottom cutout Manual grinding started at supplier

PCA:- 5th Body mount outrigger pocket size increased by 3mm.

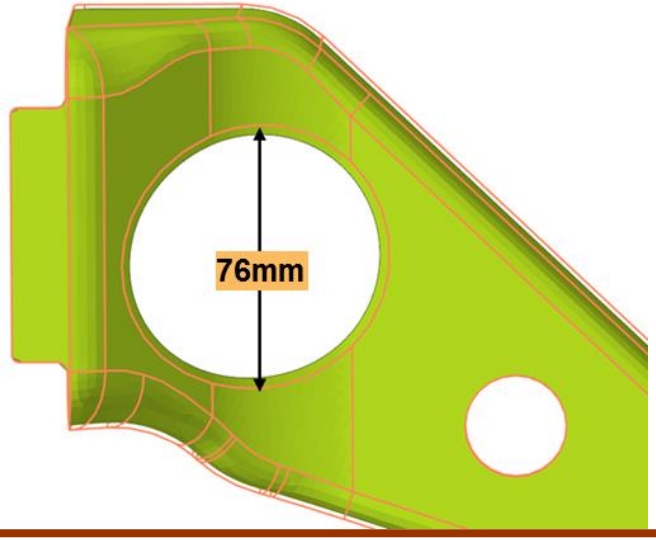

6. Implement the corrective measures

6.1 Actions Decided

No	Root Cause	Action plan	Actual date	Responsibility	Status
10	Insulator mounting shifted on chassis	Derive control in tightening process to avoid positive movement of part towards chassis outrigger bracket edge **– SOS modified –** **Mounting sequence changed for bolt tightening.**	17.07.2019	Sor Suryabhan	**Implemented**

OBSERVATIONS AND ACTIONS :-

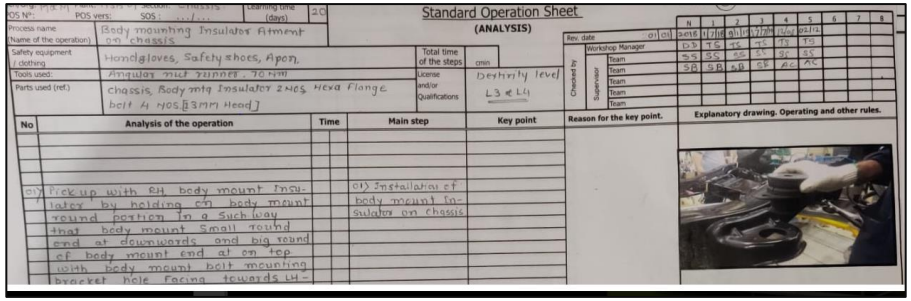
Standard Operation Sheet
(ANALYSIS)
Process name: Body mounting Insulator fitment on chassis
Safety equipment / clothing: Hand gloves, Safety shoes, Apon,
Tools used: Angular nut runner, 70 nm
Parts used (ref.): chassis, Body mtg Insulator 2 nos, Hexa Flange bolt 4 nos (13mm Head)
Total time of the steps: min
Dexterity level: L3 & L4
Checked by: Workshop Manager, Supervisor, Team
Rev. date: 01/01/2015, 01/07/2018, 01/07/2019, 16/02/2021

No	Analysis of the operation	Time	Main step	Key point	Reason for the key point.	Explanatory drawing. Operating and other rules.
01)	Pick up with RH body mount Insulator by holding on body mount round portion in a such way that body mount small round end at downwards and big round of body mount end at on top with body mount bolt mounting bracket hole facing towards LH		01) Installation of body mount Insulator on chassis			

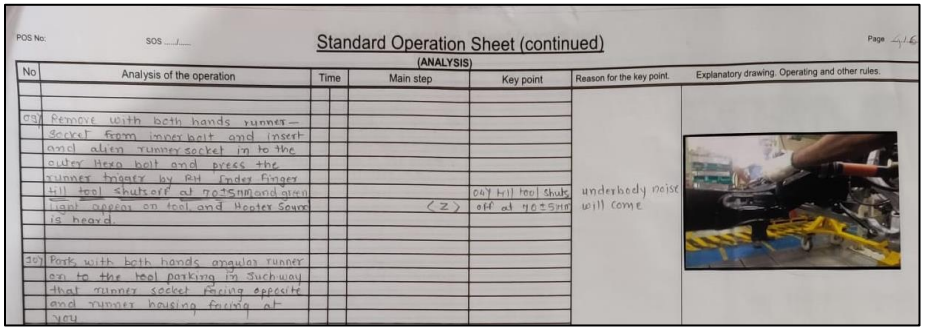
POS No:
SOS ...../.....
Standard Operation Sheet (continued)
(ANALYSIS)
Page 4/6

No	Analysis of the operation	Time	Main step	Key point	Reason for the key point.	Explanatory drawing. Operating and other rules.
09)	Remove with both hands runner socket from inner bolt and insert and alien runner socket in to the outer Hexa bolt and press the runner trigger by RH Index finger till tool shut off at 70±5nm and green light appear on tool and Beeper Sound is heard.		04) till tool shuts off at 70±5nm (Z)		underbody noise will come	
30)	Pass with both hands angular runner on to the tool parking in such way that runner socket facing opposite end runner housing facing at you					

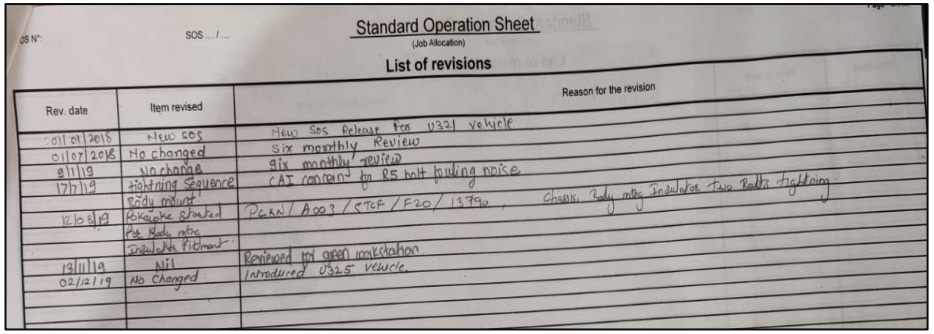
SOS N°:
SOS ...../....
Standard Operation Sheet
(Job Allocation)
List of revisions

Rev. date	Item revised	Reason for the revision
01/01/2015	New SOS	New SOS Release for U321 vehicle
01/07/2018	No changed	Six monthly Review
8/11/19	No change	Six monthly review
17/7/19	Tightning Sequence Body mount	CAT concern for R5 bolt pulling noise
12/8/19	Fokuipke Bracket Pos Body mtg Insulator fitment	DCRN / A003 / CTCF / F20 / 13790 , Chassis, Body mtg Insulator Two Bolts tightning
13/11/19	Nil	Reviewed by open interchange
02/12/19	No Changed	Introduced U325 Vehicle

7. Check & confirm the results & effects

7.2 Full Scale Implementation plan:

S N	Action Taken	Actual date	Responsibility	Status
1	Line DRF for Detection One-point lesson for associate	24.07.2019	Suryabhan Sor	CLOSED
2	EN for increase in cutout on outrigger.	26.09.2019	Shrikanth Vangala	CLOSED
3	ADD DELETE mail from R&D to Process.	26.09.2019	Girishankar Kale	CLOSED
4	Line side outrigger fitment SOS modified.	17.07.2019	Suryabhan Sor	CLOSED

7. Check & confirm the results & effects

7.1 Verify Results:

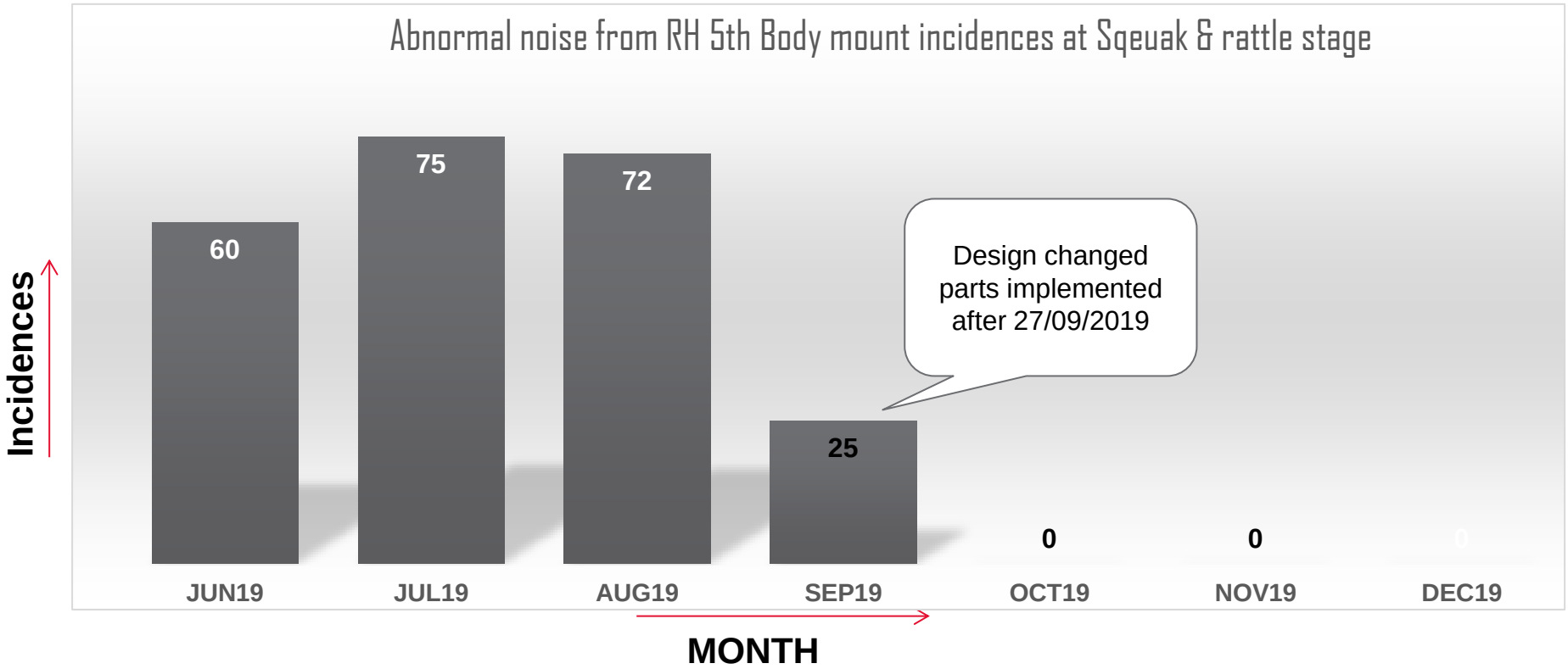

INFERENCE:- Abnormal noise from RH 5th body mount is eliminated after taking design corrective action.

Check & confirm the results & effects (Cont..)

7.3 Tangible & Intangible benefits:

Tangible Benefits -

1) One of Chronic concern at CAI is eliminated.
2) Rs 26,709.7 Cost Saved/ Annum

In tangible Benefits :-

1) Improved Customer Satisfaction.
2) Major field issue protected to pass on.
3) Operator fatigue reduced for rework, moral improved

DR DHANOKAR RAJESH | JADHAV NIRANJAN--NASHIK; DHANOKAR RAJESH

Re:FW: COPQ

okay approved

Sent from my Redmi Note 4X

On JADHAV NIRANJAN--NASHIK <JADHAV.NIRANJAN2@mahindra.com>, 21-Feb-2020 9:06 PM wrote:

Please approve..

Rework Cost estimation		
Description	Units	
Rework time (Approx)	Min	10
Avg Concerns/Day	Nos	2.8
Total Required Rework time per day	Min	28
Effective working time	Min	465
Operator required /day	nos	0.06
Approx Operator cost/ day	Rs	1500
Operator cost /concern	Rs	89.03
Avg no. of working days	days	25
Operator cost /month	Rs	2225.8
Operator Cost/year	**Rs**	**26709.7**

Niranjan

8. Standardization

8.1 Updation of documents: e.g. DFMEA, PFMEA, DCP, SOP, SOS, drawing.

SN	Document	Actual date	Responsibility	Status
1	Line DRF for Detection.	24.07.2019	Surybhan Sor	CLOSED
2	EN for increase in cutout on outrigger	26.09.2019	Shrikanth Vangala	CLOSED
3	New outrigger bracket drawing	26.09.2019	Shrikanth Vangala	CLOSED
4	FTR , DCR	26.09.2019	Shrikanth Vangala	CLOSED

8.2 Training:

SN	Training Identified	Actual date	Responsibility	Status
1.	Training with SOS to line associates	17.07.2019	Surybhan Sor	Closed

8.3 Additional Audit & check

1	Check point added in under pit check sheet	25.07.2019	Niranjan Jadhav	Closed

8. Standardization

8.1 Updation of documents: e.g. DFMEA, PFMEA, DCP, SOP, SOS, drawing.

SN	Document	Actual date	Responsibility	Status
1	Line DRF for Detection.	20.07.2019	Suryabhan Sor	CLOSED

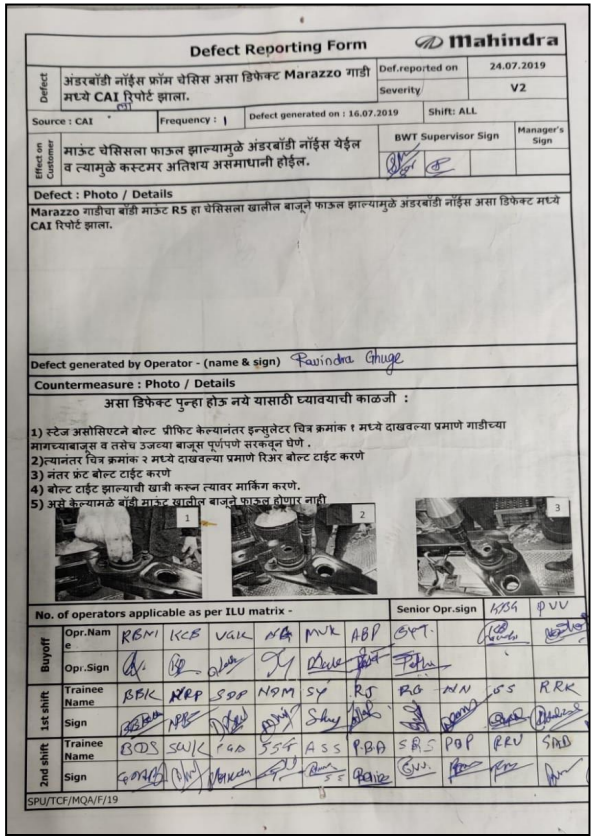

Defect Reporting Form — Mahindra

Defect: अंडरबॉडी नॉईस फ्रॉम चेसिस असा डिफेक्ट Marazzo गाडी मध्ये CAI रिपोर्ट झाला.

Def.reported on: 24.07.2019

Severity: V2

Source : CAI | Frequency : 1 | Defect generated on : 16.07.2019 | Shift: ALL

Effect on Customer: माऊंट चेसिसला फाऊल झाल्यामुळे अंडरबॉडी नॉईस येईल व त्यामुळे कस्टमर अतिशय असमाधानी होईल.

BWT Supervisor Sign | Manager's Sign

Defect : Photo / Details

Marazzo गाडीचा बॉडी माऊंट R5 हा चेसिसला खालील बाजूने फाऊल झाल्यामुळे अंडरबॉडी नॉईस असा डिफेक्ट मध्ये CAI रिपोर्ट झाला.

Defect generated by Operator - (name & sign) Ravindra Ghuge

Countermeasure : Photo / Details

असा डिफेक्ट पुन्हा होऊ नये यासाठी घ्यावयाची काळजी :

1) स्टेज असोसिएटने बोल्ट प्रीफिट केल्यानंतर इन्सुलेटर चित्र क्रमांक १ मध्ये दाखवल्या प्रमाणे गाडीच्या मागच्याबाजूस व तसेच उजव्या बाजूस पूर्णपणे सरकवून घेणे .
2)त्यानंतर चित्र क्रमांक २ मध्ये दाखवल्या प्रमाणे रिअर बोल्ट टाईट करणे
3) नंतर फ्रंट बोल्ट टाईट करणे
4) बोल्ट टाईट झाल्याची खात्री करून त्यावर मार्किंग करणे.
5) असे केल्यामुळे बॉडी माऊंट खालील बाजूने फाऊल होणार नाही

No. of operators applicable as per ILU matrix - | Senior Opr.sign

Buyoff	Opr.Name	RBM	KCB	VGK	NR	MVK	ABP	SYT.			
	Opr.Sign										
1st shift	Trainee Name	BBK	NRP	SDP	NDM	SY	RJ	RG	NN	GS	RRK
	Sign										
2nd shift	Trainee Name	BDS	SWK	PGD	SSG	ASS	PBA	SRS	PDP	RRV	SAD
	Sign										

SPU/TCF/MQA/F/19

Conclusion:-

1. Abnormal noise from 5th Body mount is observed is made aware to line associate.
2. Same is to be reworked on stage.

8. Standardization

8.1 Updation of documents: e.g. DFMEA, PFMEA, DCP, SOP, SOS, drawing.

SN	Document	Actual date	Responsibility	Status
2	EN for increase in cutout on outrigger.	26.09.2019	SHRIKANTH VANGALA	CLOSED

Mahindra & Mahindra Ltd.
Product Development

"Confidential Report"

Page No 1

Mahindra Rise

Engineering Notice Release: U321-EN-A003-000140
AD Product Development
Mahindra & Mahindra LTD(A.S)

Created Date 16-Sep-2019
Initiated Date 20-Sep-2019

Engineering Notice No : U321-EN-A003-000140

Released Date : 26-Sep-2019 13:16

Reference Change Req No : DCR044414

Location : AD-NASIK

Implementation Location : M&M-Nasik

Engineering Notice Description : cutout on chassis outrigger increased by 3 mm.

Reason : Underbody noise during braking because of body mount hitting chassis

Quantity : -(Regular)

Reason Code : Field complaints / Service feedback / Warranty Cost reduction

Priority : Mandatory

Note : --

Affected Models : MARAZZO ALL VARIANTS

Is EN Re Released? :

Parent EN NO :

Life Cycle State : Released

Owner Name : SHRIKANTH VANGALA (23120150)

Engineer : SHRIKANTH VANGALA (23120150)

Approved By : 301168-BHOLE MAHENDRA

Authorized By : U321-HEAD_23066973-DANDAMUDI CHIRANJEEVI

Legends

Add New : A Part/Assy that is getting released through ECN for the very first time

Modified : A Part/Assy that is already released through an ECN and has undergone some changes

Added with Modification : It is very similar to "Modified" status except that it is being added newly into a different Parent

Existing : A Part/Assy that is already being used is carried forward as it is to some other parent

Deleted : A Part/Assy that is being used is removed from a Parent

Reinstated : Reintroduction of a Part/Assy that was used Previously in M&M but was discontinued

Added/Deleted Qty : It's delta of existing released EN for the same parent part number

ICA :
O - New part number can be used in place of old part no. & vice versa;
I - New part number can be used in place of old part no. but not vice versa;
Z - Old part number can be used in place of new part no. but not vice versa;
X - No ICA between new and old part numbers;
Y - Interchangeability as set of parts (to use new part no. we have to use more than one new part no);
NA - Not Applicable;

Engineering Notice No : U321-EN-A003-000140

8. Standardization

8.1 Updation of documents: e.g. DFMEA, PFMEA, DCP, SOP, SOS, drawing.

SN	Document	Actual date	Responsibility	Status
3	New bracket drawing	26.09.2019	SHRIKANTH VANGALA	CLOSED

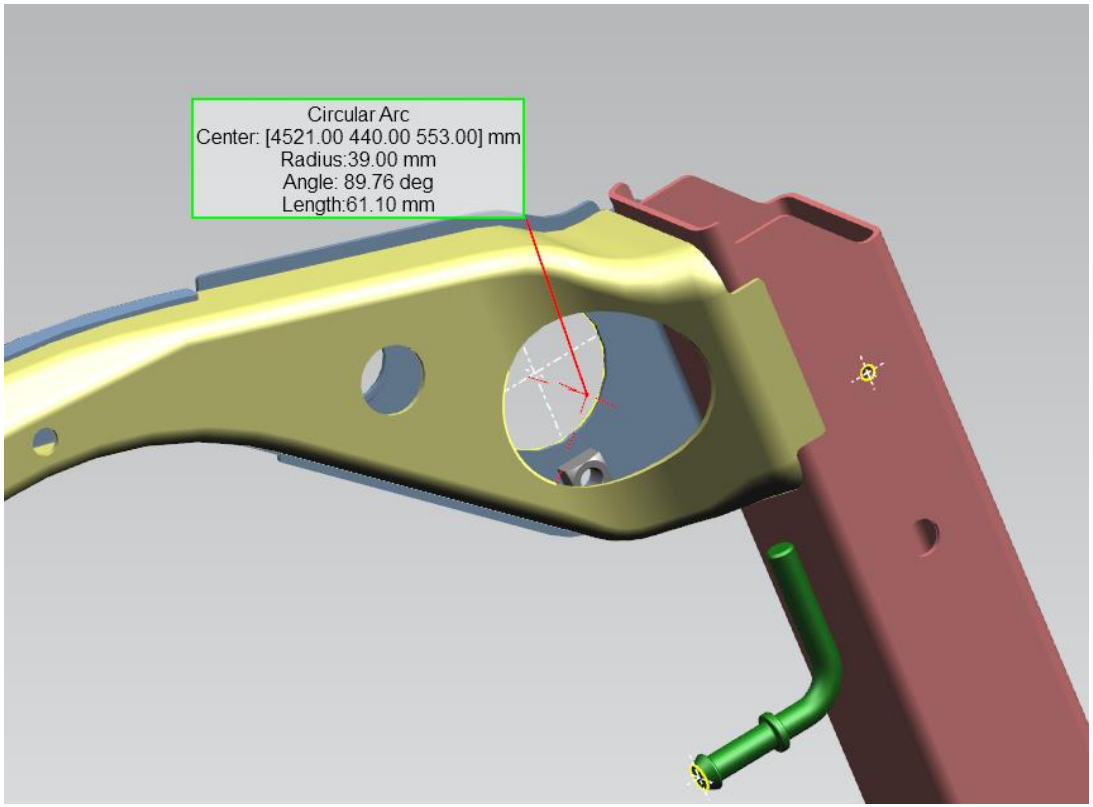

8. Standardization

8.1 Updation of documents: e.g. DFMEA, PFMEA, DCP, SOP, SOS, drawing.

SN	Document	Actual date	Responsibility	Status
4	FTR , DCR , Add Delete	26.09.2019	SHRIKANTH VANGALA	CLOSED

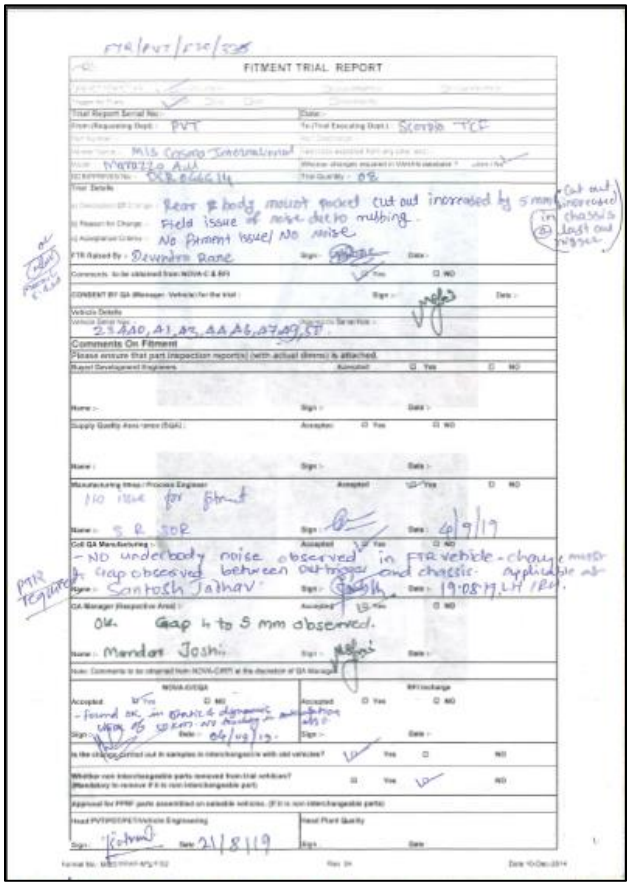

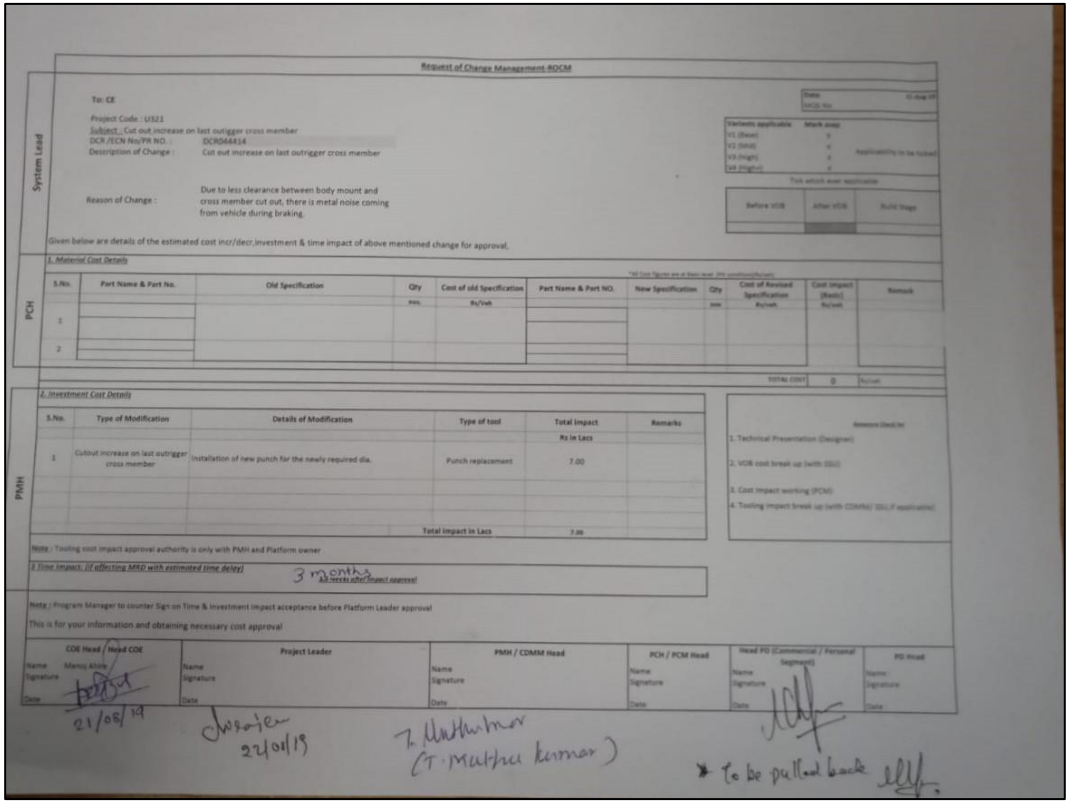

8. Standardization

8.1 Updation of documents: e.g. DFMEA, PFMEA, DCP, SOP, SOS, drawing.

SN	Document	Actual date	Responsibility	Status
4	FTR , DCR , Add delete	26.09.2019	SHRIKANTH VANGALA	CLOSED

Mahindra Rise.

Engineering Notice Release: U321-EN-A003-000140
AD Product Development
Mahindra & Mahindra LTD(A.S)

Created Date	16-Sep-2019
Initiated Date	20-Sep-2019

Part Number	Rev	Nomenclature	Status	ICA	Total BOM Qty	Added/ Deleted Qty	Replaced/ Deleted Part	Parent Part	Variant Condition	Responsibility	Remarks	Discontinued
0000AU30017LA	*D/009*	*U321 FRAME ASSEMBLY*	*Modified*	*NA*	*1*	*0*		*U321-EBOM*	*[U321-PDB]EMISSION = BS4 AND [U321-PDB]FUEL = DIESEL*	*KALE GIRISHANKAR (84131)*		*No*
0201AAL07590N	C/028	FRAME ASSY COMPLETE	Modified	NA	1	0		0000AU30017LA		KALE GIRISHANKAR (84131)		No
0201FAL01180N	C/012	CROSS MEMBER RR ASSY	Modified	NA	1	0		0201AAL07590N		KALE GIRISHANKAR (84131)		No
0201FAL01200N	C/011	CROSS MEMBER RR LWR	Modified	NA	1	0		0201FAL01180N		KALE GIRISHANKAR (84131)		No

Engineering Notice No : U321-EN-A003-000140

8. Standardization

8.2 Training:

Action Plan	Target Dt	Resp.	Status
Training with SOS to line associates	17.07.2019	Suryabhan Sor.	Closed

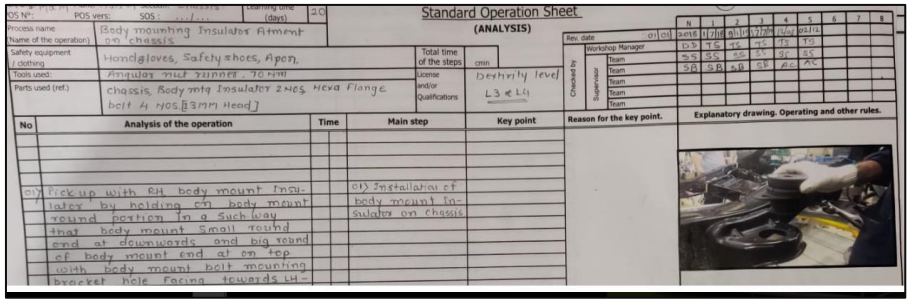
Standard Operation Sheet
(ANALYSIS)
Process name: Body mounting Insulator Atment on chassis
Safety equipment / clothing: Handgloves, Safety shoes, Apon,
Tools used: Angular nut runner, 70 rpm
Parts used (ref.): chassis, Body mtg Insulator 2 Nos, Hexa Flange bolt A M05.83mm Head]
Total time of the steps: cmin
License and/or Qualifications: Dexterity level L3 & L4
Rev. date: 01/01/2016
Workshop Manager: DB
Supervisor: SS
Team: SB
No | Analysis of the operation | Time | Main step | Key point | Reason for the key point. | Explanatory drawing. Operating and other rules.
01) Pickup with RH body mount Insulator by holding on body mount round portion in a such way that body mount small round end at downwards and big round of body mount end at on top with body mount bolt mounting bracket hole facing towards LH-
01) Installation of body mount Insulator on chassis

1. Stage associate and buy off inspectors are made aware about defect reported.
2. Detection and prone causes shared with line associate.

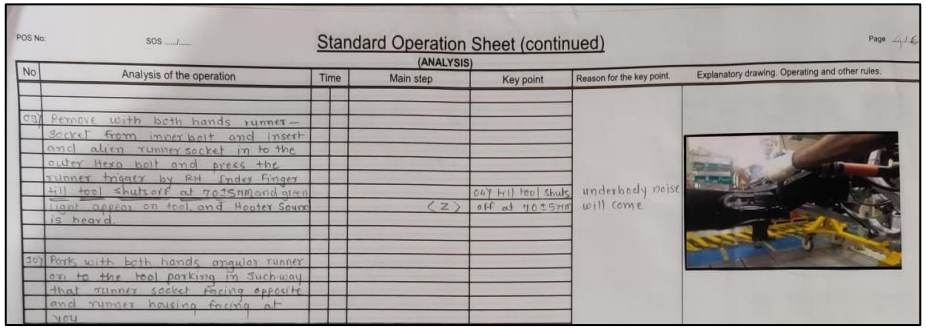
POS No: SOS ...../.....
Standard Operation Sheet (continued)
(ANALYSIS)
Page 4/5
No | Analysis of the operation | Time | Main step | Key point | Reason for the key point. | Explanatory drawing. Operating and other rules.
03) Remove with both hands runner socket from inner bolt and insert and alen runner socket in to the outer Hexa bolt and press the runner trigger by RH index finger till tool shutoff at 70±5mm and green light appear on tool and Hooter Sound is heard.
03) Fix with both hands angular runner on to the tool parking in such way that runner socket facing opposite end runner housing facing at you.
<2>
04) till tool shuts off at 70±5mm
underbody noise will come

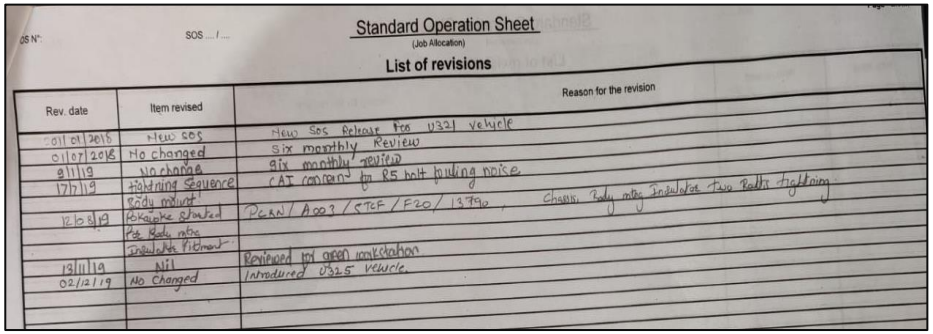
Standard Operation Sheet
(Job Allocation)
List of revisions
Rev. date | Item revised | Reason for the revision
01/01/2015 | New SOS | New SOS Release for U321 vehicle
01/07/2016 | No changed | Six monthly Review
9/11/19 | No change | 9ix monthly review
17/7/19 | Tightning Sequence Body mount | CAI concern for R5 bolt looking noise
12/08/19 | Rokaipke Bowled Pe Body mtg | PCRN/A003/STCF/F20/13790, Chassis, Body mtg Insulator two Bolts tightning
13/11/19 | Nil | Reviewed for green inspection
02/12/19 | No Changed | Introduced U325 vehicle.

8. Standardization

8.3 Additional Audit & check

CAI under body check sheet updated on 25.07.2019

Underbody check sheet is updated for dynamic check for defect for time being.

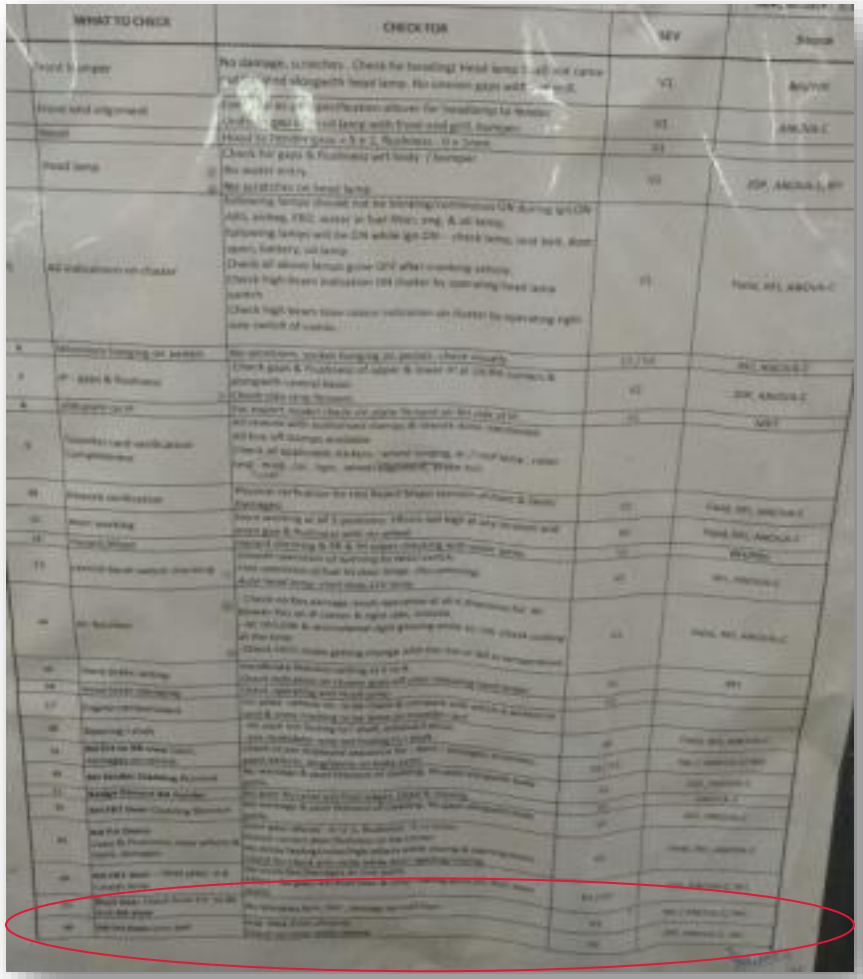

9. Summaries & Plan future actions

9.1 Conclusion:

After taking corrective action on Abnormal noise from RH 5th body mount issue is eliminated from TCF.

9.2 Horizontal Deployment:

Inputs given for W501 Project

9.3 Lessons Learnt:

Things Gone Wrong :

Supplier recommendation and mating part geometry not studied while design, Other model is also not benchmarked for same part fitment.

Things Gone Right :
Design study always plays important role in problem solving.

Supplier recommendation taken into consideration while analysis, Gemba observations plays important role in problem solving.

Thank you

Visit us at www.mahindra.com

Disclaimer

Mahindra & Mahindra herein referred to as M&M, and its subsidiary companies provide a wide array of presentations and reports, with the contributions of various professionals. These presentations and reports are for informational purposes and private circulation only and do not constitute an offer to buy or sell any securities mentioned therein. They do not purport to be a complete description of the markets conditions or developments referred to in the material. While utmost care has been taken in preparing the above, we claim no responsibility for their accuracy. We shall not be liable for any direct or indirect losses arising from the use thereof and the viewers are requested to use the information contained herein at their own risk. These presentations and reports should not be reproduced, re-circulated, published in any media, website or otherwise, in any form or manner, in part or as a whole, without the express consent in writing of M&M or its subsidiaries. Any unauthorized use, disclosure or public dissemination of information contained herein is prohibited. Unless specifically noted, M&M or any of its subsidiary companies is not responsible for the content of these presentations and/or the opinions of the presenters. Individual situations and local practices and standards may vary, so viewers and others utilizing information contained within a presentation are free to adopt differing standards and approaches as they see fit. You may not repackage or sell the presentation. Products and names mentioned in materials or presentations are the property of their respective owners and the mention of them does not constitute an endorsement by M&M or its subsidiary companies. Information contained in a presentation hosted or promoted by M&M is provided "as is" without warranty of any kind, either expressed or implied, including any warranty of merchantability or fitness for a particular purpose. M&M or its subsidiary companies assume no liability or responsibility for the contents of a presentation or the opinions expressed by the presenters. All expressions of opinion are subject to change without notice.

Copyright © 2012 Mahindra & Mahindra Ltd. All rights reserved.